REV.	ECN NO.	LOCATIONS	DESCRIPTION	DATE	DESIGN
A0			NEW RELEASE	07/10'24	Jay

CUSTOMER DRAWING

RoHS Compliant

ORDERING INFORMATION

MCCFT - V2Z2 (XX T)
1 2 3

1 PRODUCT SERIES:
USB C TYPE connector - Receptacle (Female) side.

2 ITEM NO.:
Vertical- SMD 24pin with 4DIP
Stacking Height 6.50mm.

3 GOLD PLATING :
01: G/F.
03: 3u".
15: 15u".
30: 30u".

3D VIEW

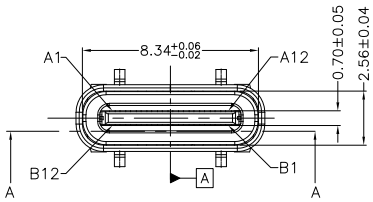

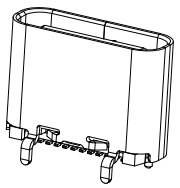

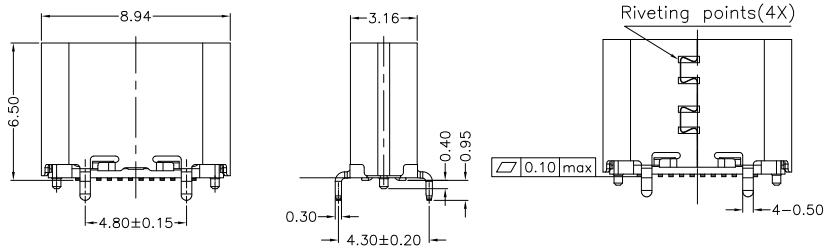

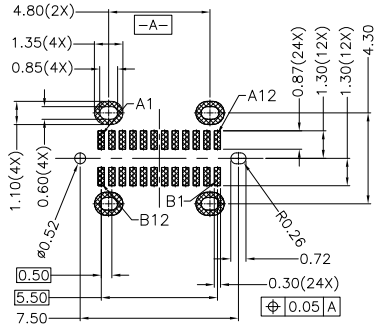

RECOMMENDED P.C.B. LAYOUT
GENERAL TOLERANCE:±0.05mm

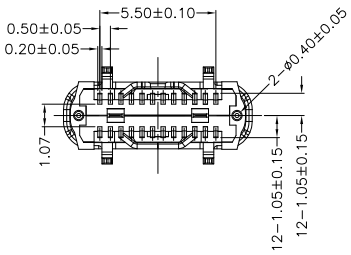

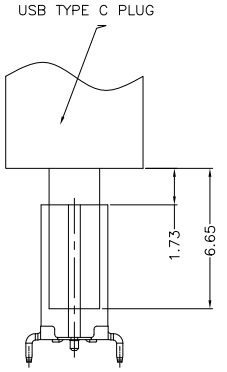

FEMALE AND MALE MATCHING DRAWING

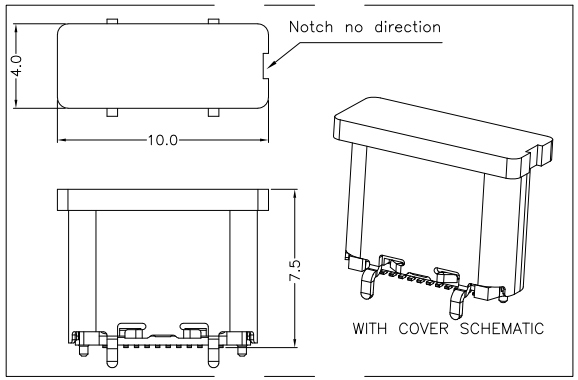

NOTES:

1. MATERIAL:
   (1) HOUSING: HIGH TEMP PLASTIC, LCP, UL94 V-0.
   (2) CONTACT: COPPER ALLOY, C18150.
   (3) MID PLATE: STAINLESS STEEL, SUS301.
   (4) EMI PLATE: STAINLESS STEEL, SUS301.
   (5) SHELL: STAINLESS STEEL, SUS304.
2. PLATED:
   (1) CONTACT: GOLD ON CONTACT AREA OVER NICKEL PLEATED OVERALL.
   (2) SHELL: NICKEL PLATED OVER ALL.
   (3) MID PLATE: CLEAR ONLY.
   (4) EMI PLATE: CLEAR ONLY.

PIN ASSIGNMENT

A1	A2	A3	A4	A5	A6	A7	A8	A9	A10	A11	A12
GND	TX1+	TX1−	VBUS	CC1	D+	D−	SBU1	VBUS	RX2−	RX2+	GND
B12	B11	B10	B9	B8	B7	B6	B5	B4	B3	B2	B1
GND	RX1+	RX1−	VBUS	SBU2	D−	D+	CC2	VBUS	TX2−	TX2+	GND

DIM	TOL
X.X	±0.30
X.XX	±0.20
X.XXX	±0.10

SUNFUN

SUNFUN TECHNOLOGY LTD

DRAW NO.	MCCFT-V2Z2(A0)	DATE	MATERIAL: SEE NOTES	DRAW NAME:	
DESIGN:	Jay	07/10'24	FINISH: SEE NOTES	USB C Type CONN − FEMALE Vertical− SMD 24pin(W/4DIP), 6.50H	
CHECK:	Jay	07/10'24	FILE: MCCFT-V2Z2(A0)	MODEL: USB C TYPE CONN	
REVIEW:	Johnson	07/10'24	P/N: MCCFT-V2Z2(XXT)	UNIT: mm	SHEET: 1/1
APPROVED	Johnson	07/10'24	REV. A0 SCALE		